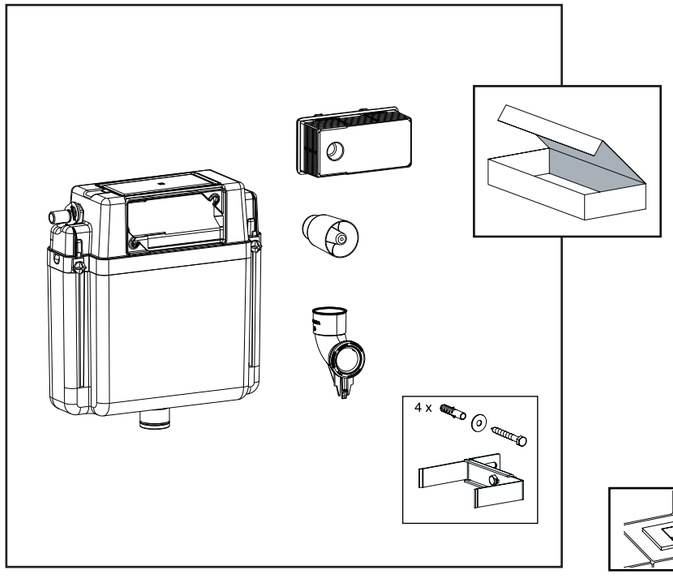

WC UP TOP / FRONT

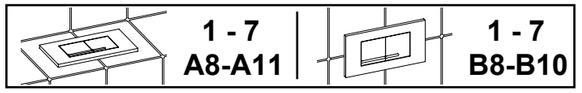

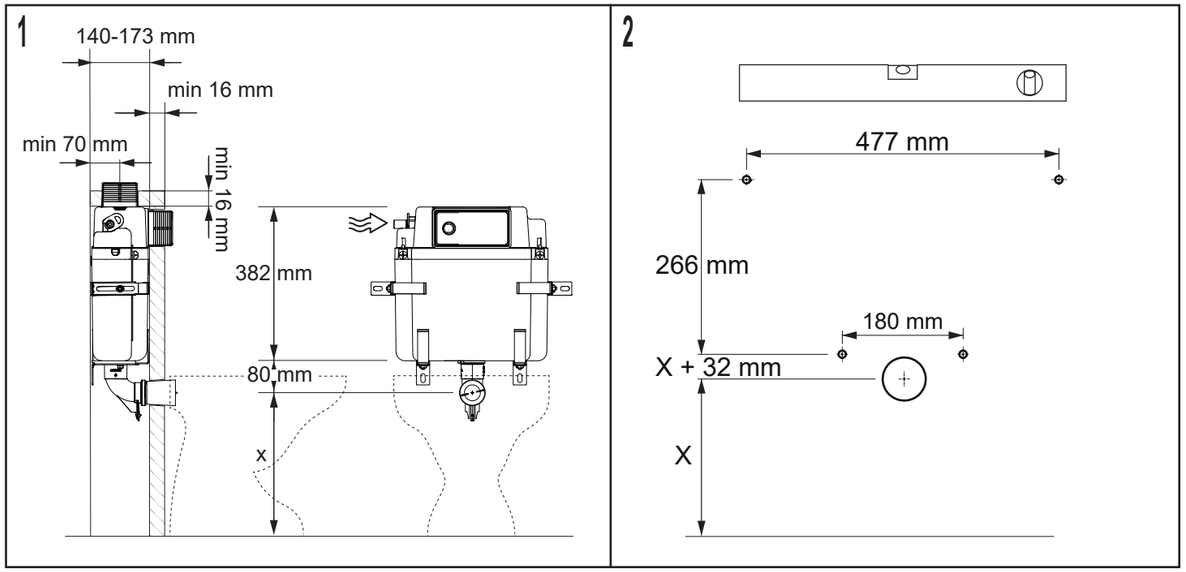

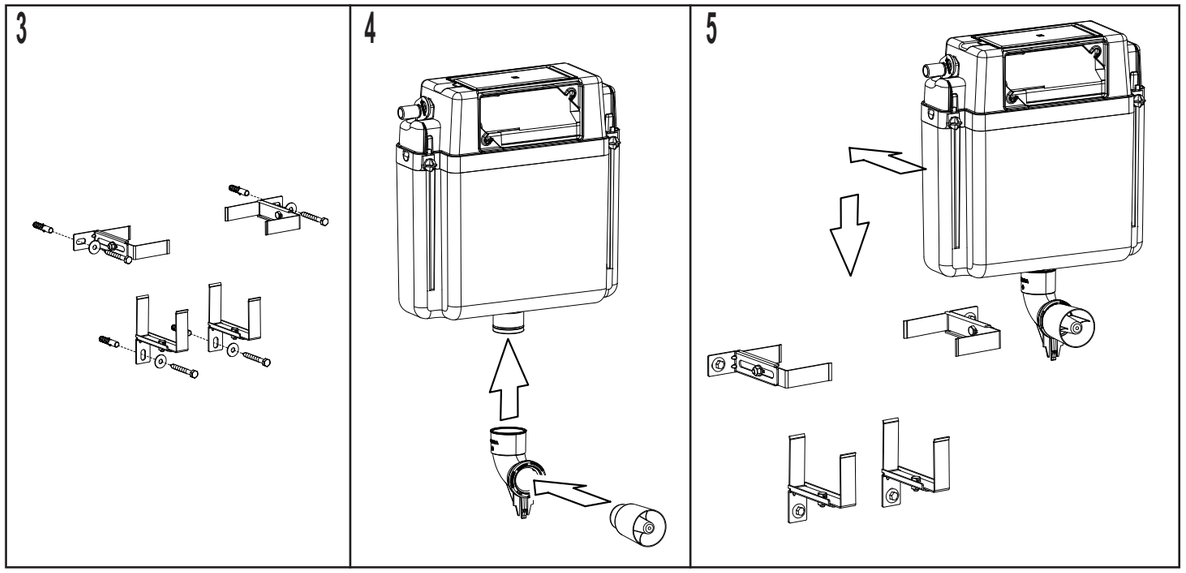

ART.NR. 1449.979317 VERSIE 2020.12 A3 Fluidmaster BV Driepoortenweg 5 6827 BP Arnhem NL info@fluidmaster.com

6

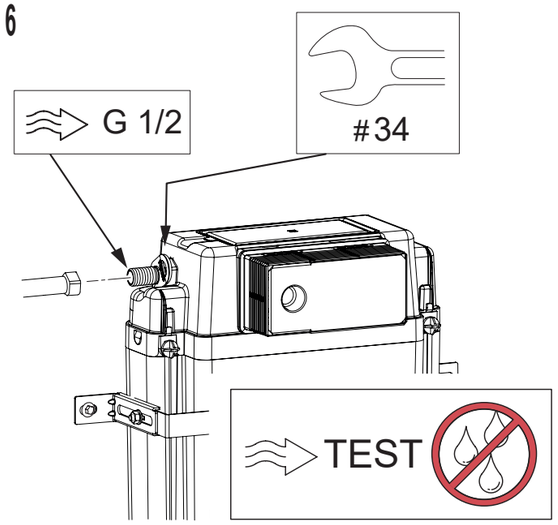

7

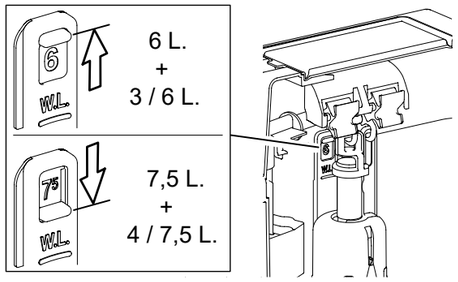

B8

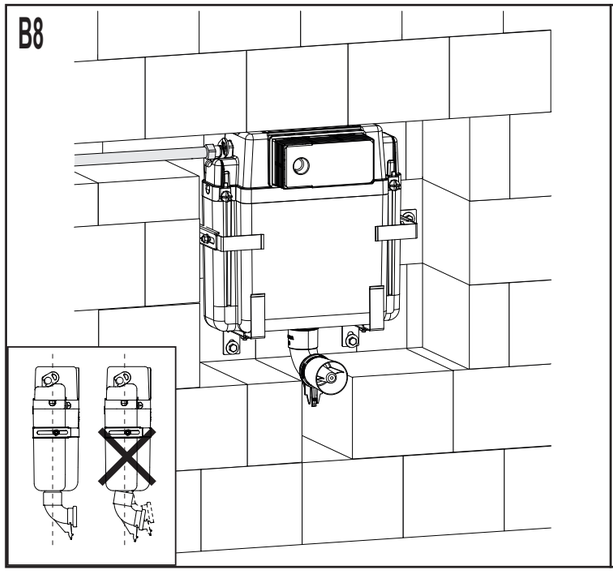

B9

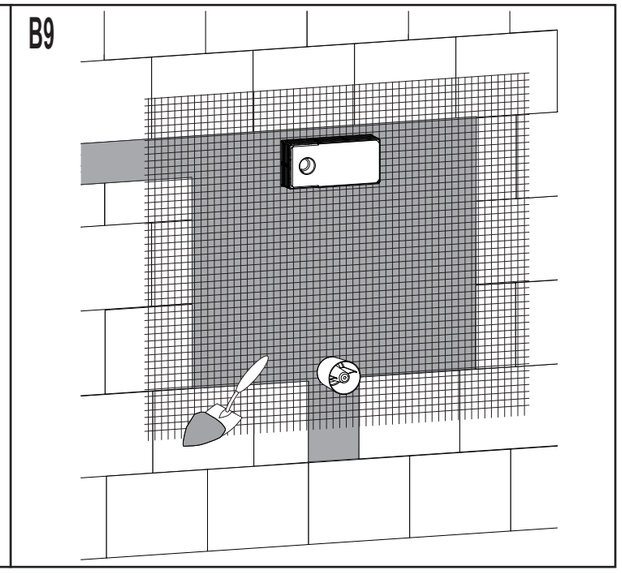

A8

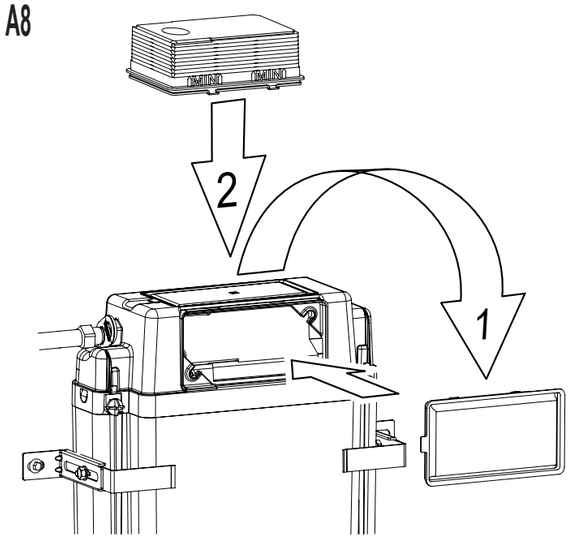

A9

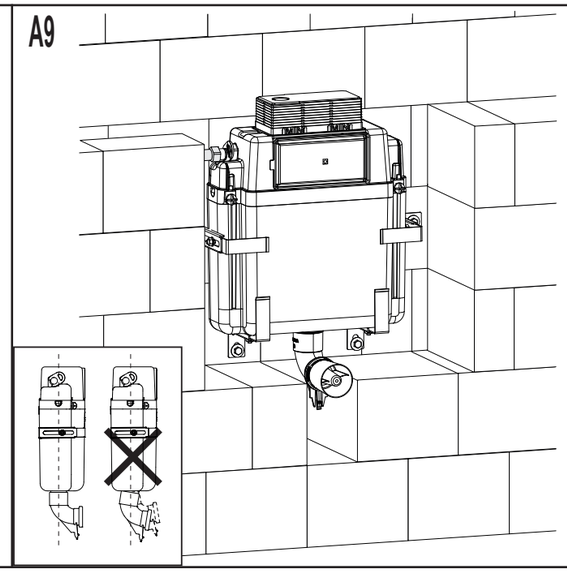

B10

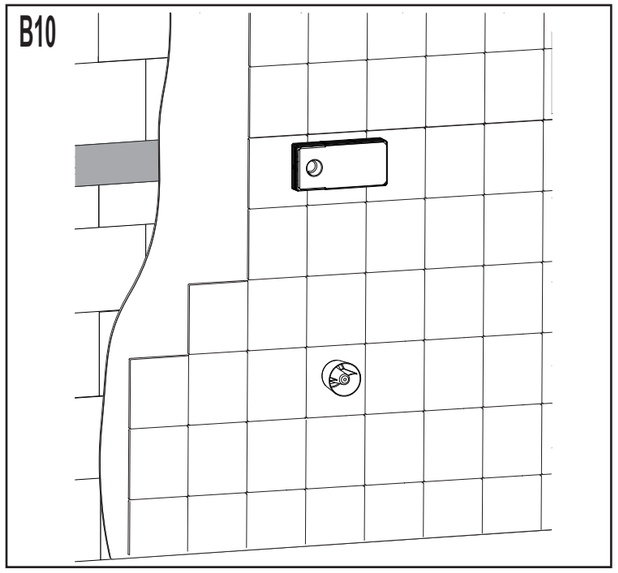

A10

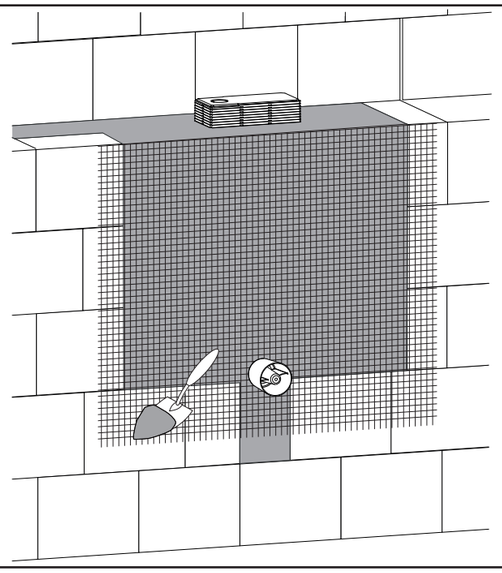

A11

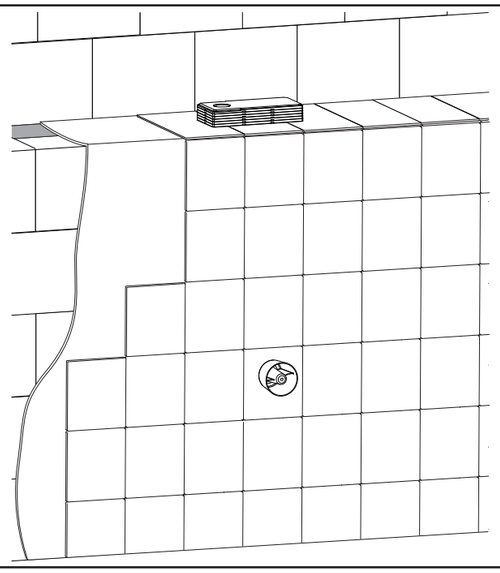

Option:

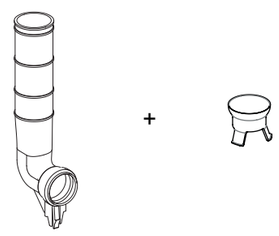
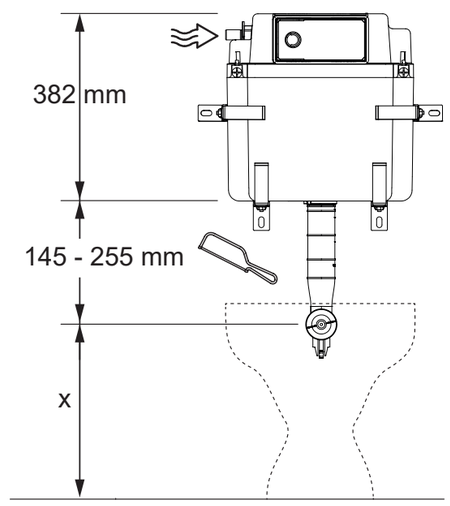
8050887355 + 8050885470